TurboSwing®

INSTALLATION MANUAL

TurboSwing MAX

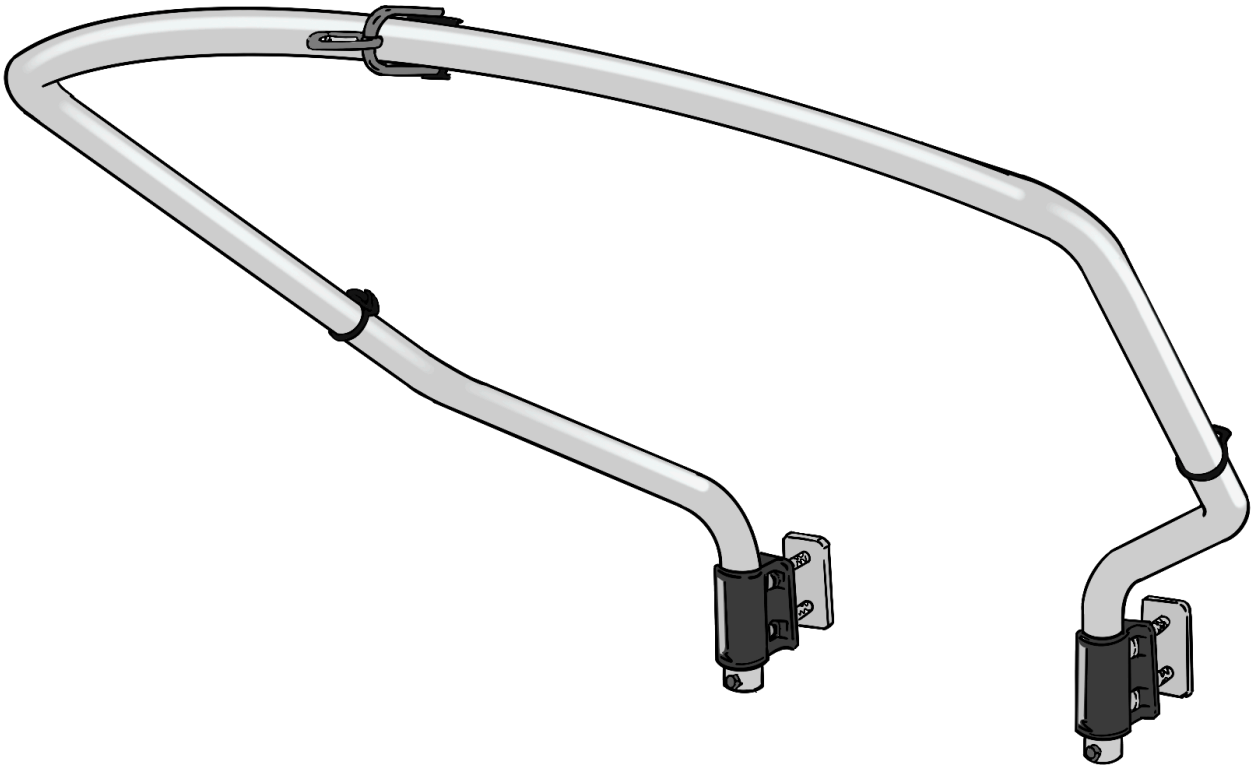

©2024 TurboSwing All Rights Reserved 2640 Byington Solway Rd, Knoxville, TN 37931 855.228.8726 turboswing.com

INCLUDED HARDWARE IDENTIFICATION

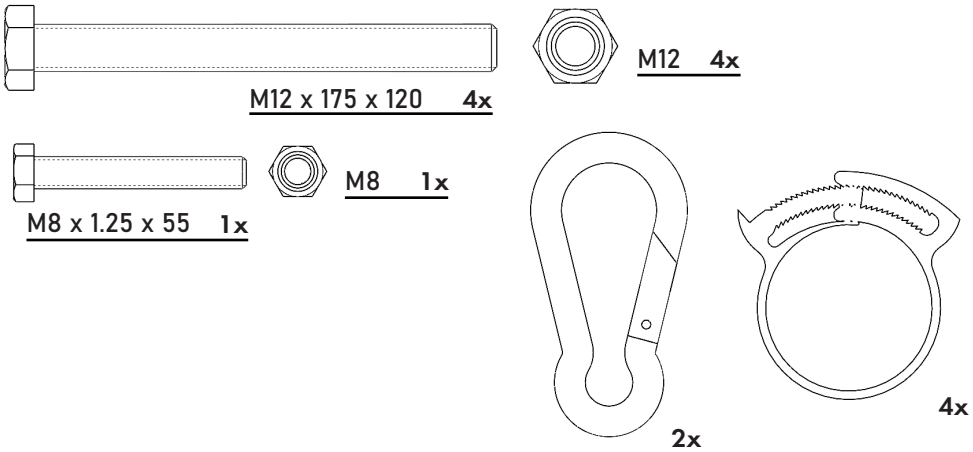

Parts List:

(1) T.S. MAX Hoop
(1) Roller
(2) TurboSwing Tube Holders
(2) Backing Plates
(2) Tube Holder Fitted Backing Plates
(2) Carabiners
(4) Pipe Clamps

GATHER ADDITIONAL TOOLS AND MATERIALS

Power Drill	Permanent Marker
1/2" Drill Bits	Level
Blue Painter's Tape	Marine Sealant for Bolts
Tape Measure	Safety Glasses
Pliers	Socket Wrench

CAUTION: If you are unfamiliar with your boat's construction, please seek professional advice before installing the TurboSwing.

For added assistance when installing your TurboSwing, please call us at 855-228-8726

As you plan to install the TurboSwing, keep in mind that drilling into the transom of the boat is needed in order to safely secure the TurboSwing to the boat.

IMPORTANT - VERIFY FITMENT BEFORE DRILLING

The mounting positions shown in these instructions are provided as general recommendations only and are not guaranteed to be suitable for every boat or installation. The installer is solely responsible for determining and verifying the proper mounting location for the specific boat and application.

Before drilling any holes or modifying the boat, the installer must independently verify proper fitment, clearance, and compatibility with the boat, engine, controls, hardware, and surrounding components.

TurboSwing is not responsible for improper fitment, interference, damage, or other issues resulting from the mounting location selected by the installer. Any installation made outside of the recommended mounting positions is performed entirely at the installer's own risk and responsibility.

*Loctite® 242 Blue can be applied to any bolt during assembly to ensure a locking fit.

© 2024 TurboSwing All Rights Reserved

Step 1: DETERMINING FITMENT OF YOUR TURBOSWING

BEFORE YOU BEGIN

If your transom has a stepped out feature that extends around the sides of the engine you will need to ensure there is enough clearance for the TurboSwing MAX to be installed.

The width from the outer edge of the outboard engine bracket to the inner edge of the stepped out feature on the transom **must be at least 12in wide.**

The step out portion of the transom **must be no more than 12in deep**. If the transom step out exceeds this depth, you will run the risk of the TurboSwing MAX touching the transom.

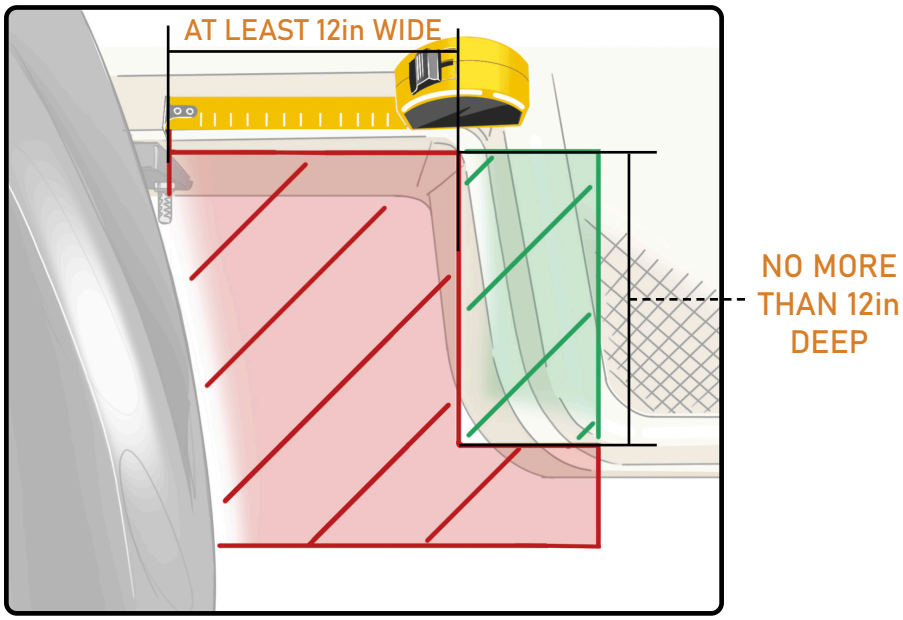

Step 1a: CHECK ENGINE CLEARANCE

To further ensure that your TurboSwing MAX can correctly be installed, mock-up the placement of the hoop around the engine. Have someone else turn the engine to both sides and check if there is any interference between the engine and TurboSwing pipe.

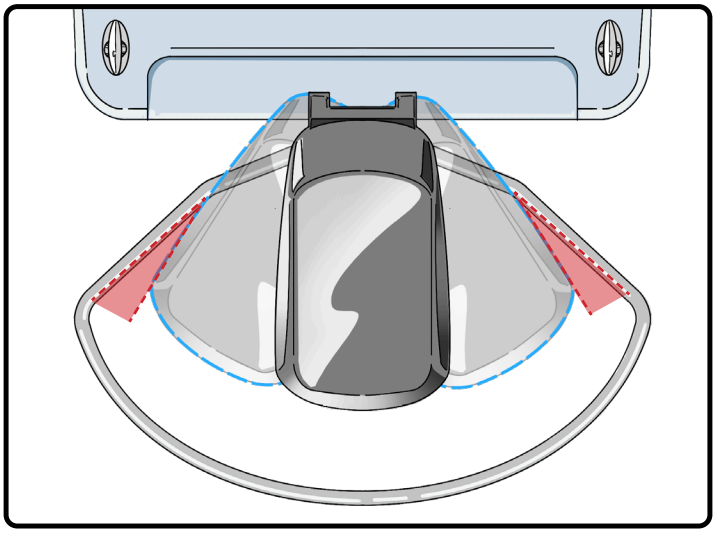

© 2024 TurboSwing All Rights Reserved

Step 2: DRILLING MOUNTING HOLES INTO TRANSOM

Before drilling make sure there is clear access for you to easily attach the backing plates and hardware to the back of the transom.

A. Locate existing engine brackets on your outboard engine.

Measure 4in over and 3in down from the bottom bolt hole to drill your first 1/2in hole.

PRO TIP: Drill the holes with the power drill in reverse to help prevent cracking the gelcoat.

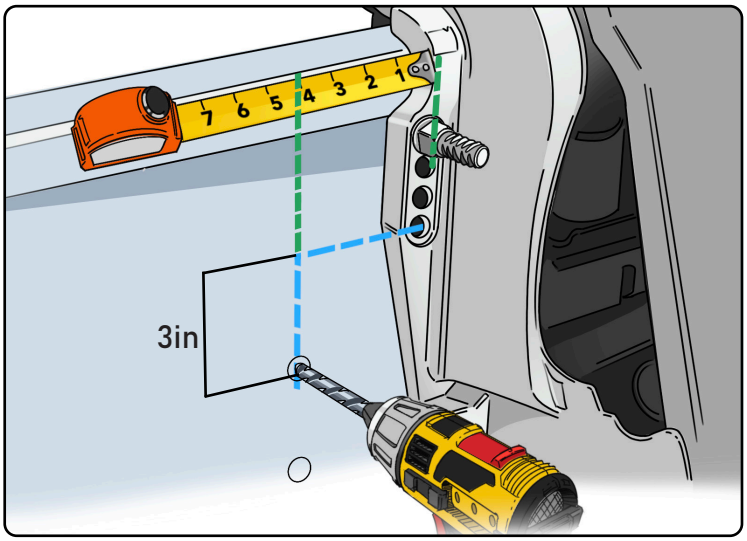

B. Determine where to drill your mounting hole using the TurboSwing bracket as a guide.

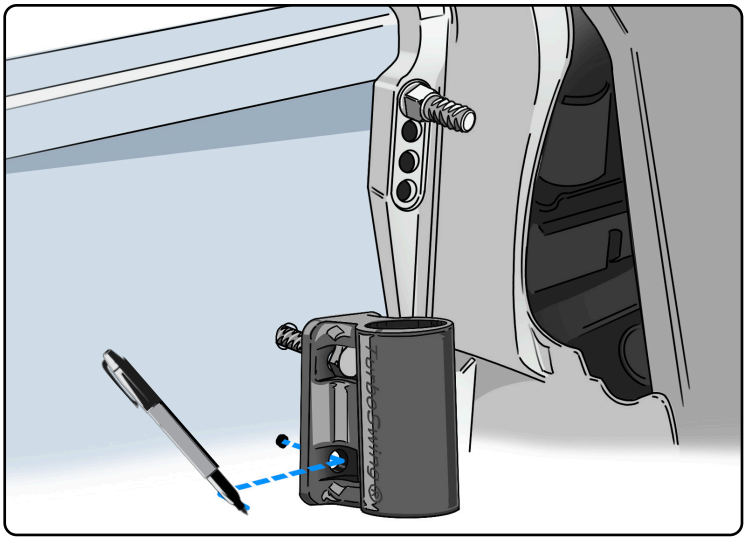

C. Remove the bracket and drill your second 1/2in hole.

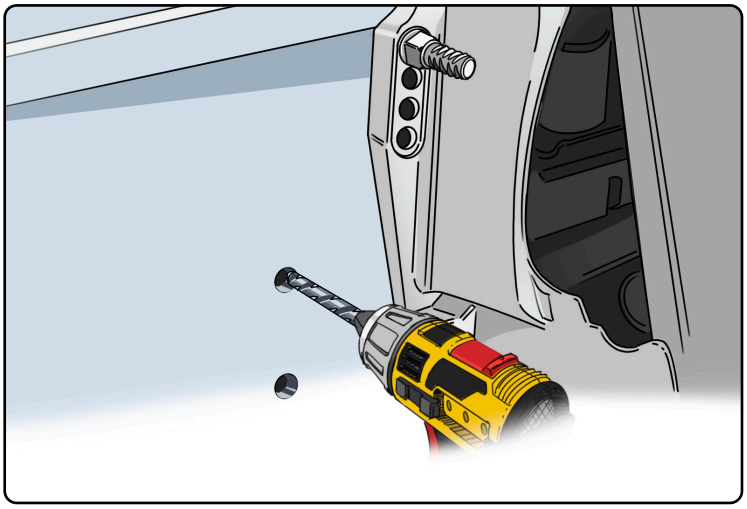

* REPEAT STEP 2 A-C FOR THE OTHER SIDE

Do you have questions? Call us @ 855.228.8726 Monday – Friday, 8am-5pm EST

©2024 TurboSwing All Rights Reserved 2640 Byington Solway Rd, Knoxville, TN 37931 855.228.8726 turboswing.com

Step 3: ATTACH BACKING PLATE AND TUBE HOLDERS

Before installing the tube holders to the transom, attach the fitted backing plate to the TurboSwing tube holders along with the M12x120 bolts.

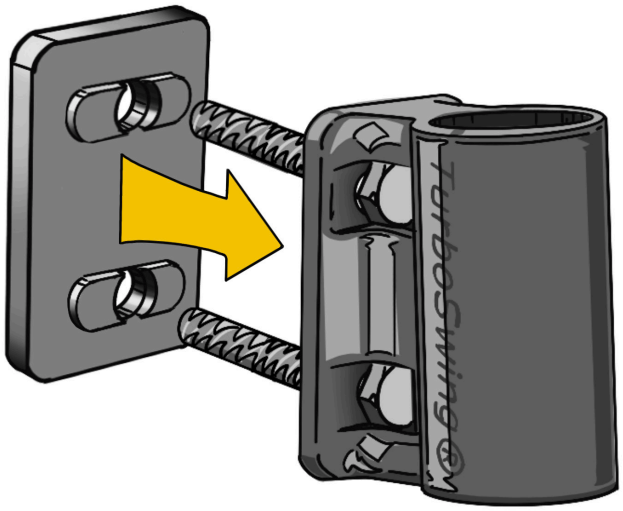

Step 4: INSTALLING THE TURBOSWING TUBE HOLDERS

***A.** Add marine sealant into the drilled holes of the transom to ensure a water tight seal.

B. Insert the M12x120 bolts into the TurboSwing tube holder and then place through the transom.

C. Place the backing plate on the backside of the transom and install the M12 nuts to capture the TurboSwing tube holder assembly.

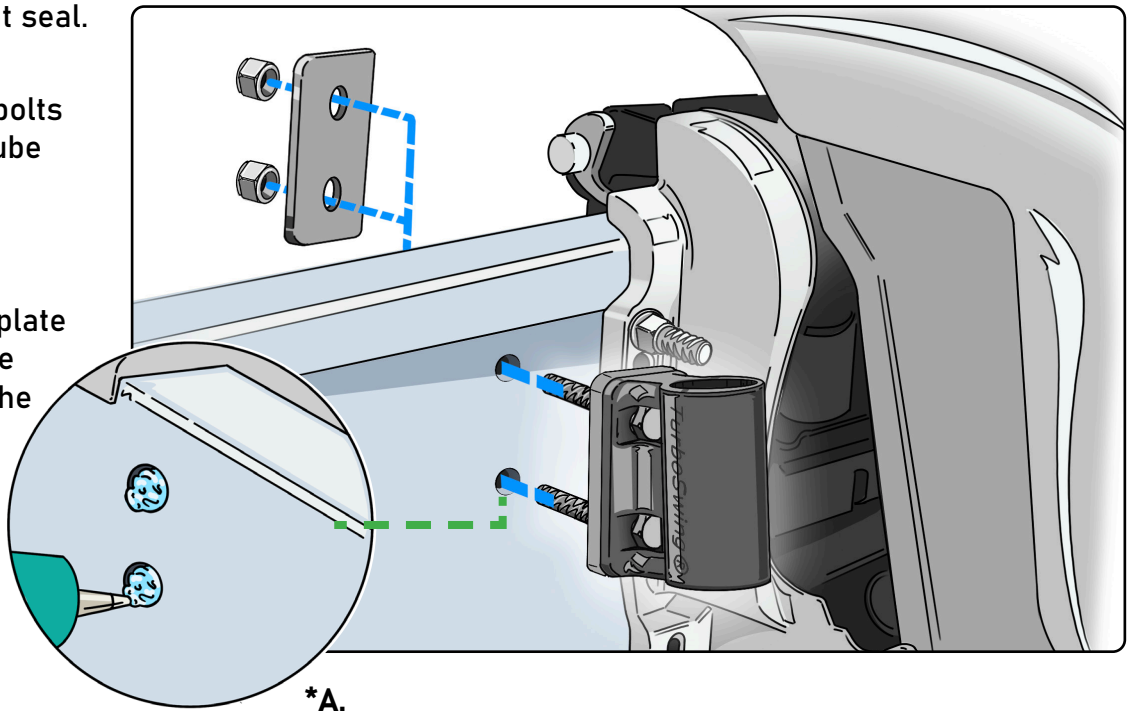

* REPEAT STEPS 3 & 4 FOR THE OTHER SIDE

Do you have questions? Call us @ 855.228.8726 Monday – Friday, 8am-5pm EST

© 2024 TurboSwing All Rights Reserved 2640 Byington Solway Rd, Knoxville, TN 37931 855.228.8726 turboswing.com

Step 5: INSTALLING THE TUBE BAR

A. With the bar laying on a level surface, install the pulley and the black pipe clamps on each side. Do not tighten the clamps too much as these will be adjusted later.

B. The hoop can be inserted to the TurboSwing tube holders at this time.

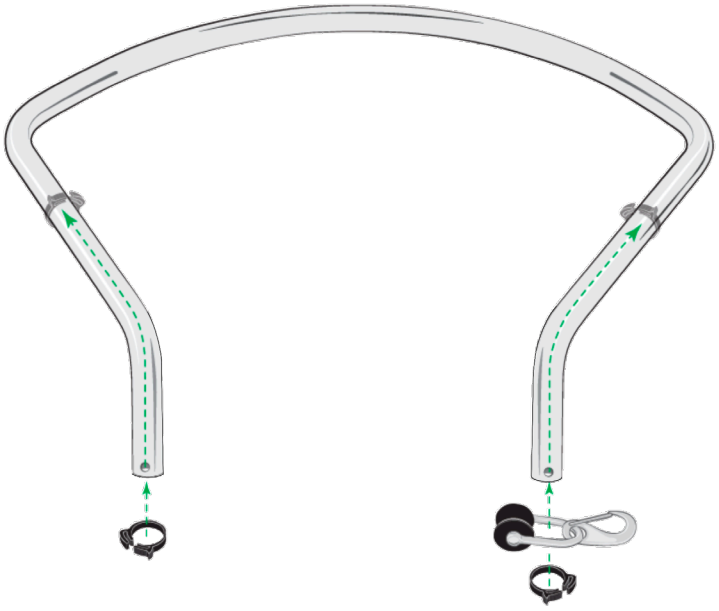

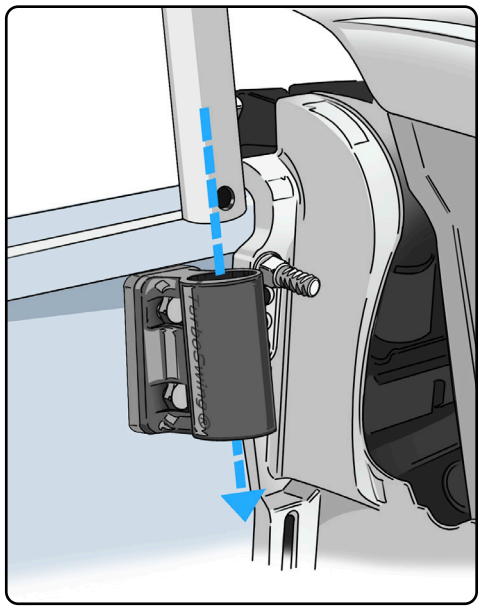

Step 6: POSITION PULLEY ON TURBOSWING

A. Slide the pulley left and right to be sure that it cannot hit any part of the motor.

B. With the motor turned, properly position the black stoppers so that the pulley will not hit the motor when tension on the rope is released.

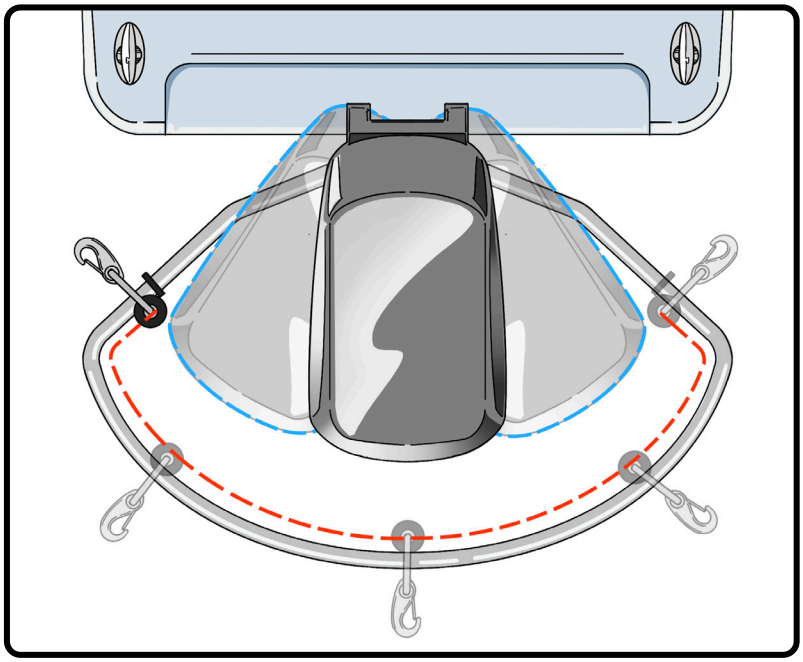

©2024 TurboSwing All Rights Reserved 2640 Byington Solway Rd, Knoxville, TN 37931 855.228.8726 turboswing.com

Step 7: TIGHTEN CLAMPS

A. Tighten the existing pipe clamps on one side and add an additional one next to it.

B. Using a measuring tape, measure the stoppers position up the TurboSwing to ensure the other side matches. Position the stoppers on the other side and securely tighten.

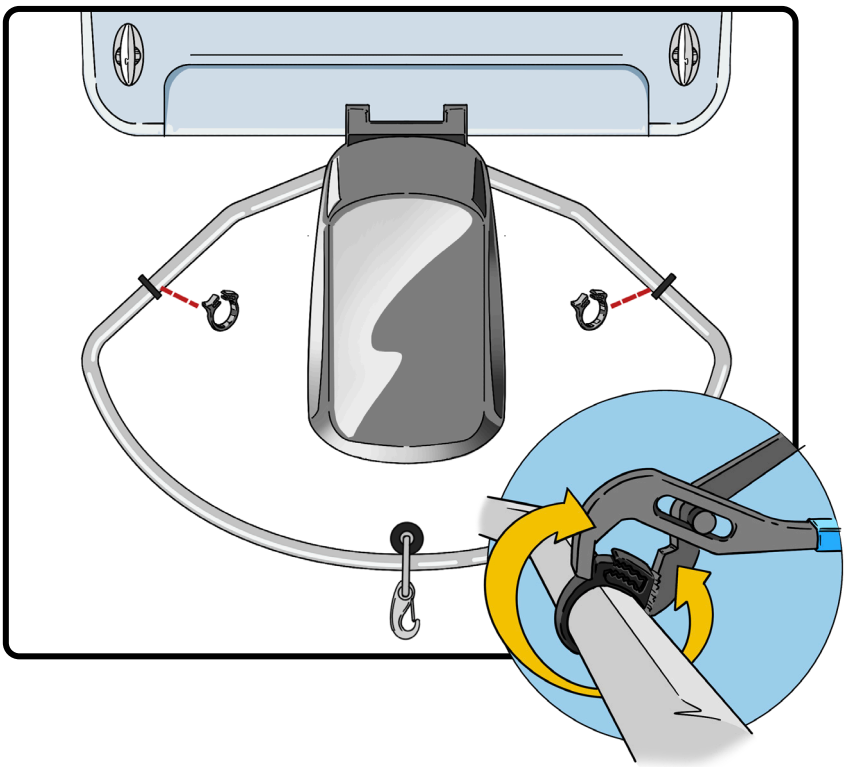

Step 8: FINISH INSTALL

A. Complete your TurboSwing install by inserting the supplied carabiners into the holes at the bottom of the TurboSwing tube. If you are looking for a more permanent installation, feel free to replace the carabiner on either side with the supplied M8x45 bolt and M8 Lock Nut.

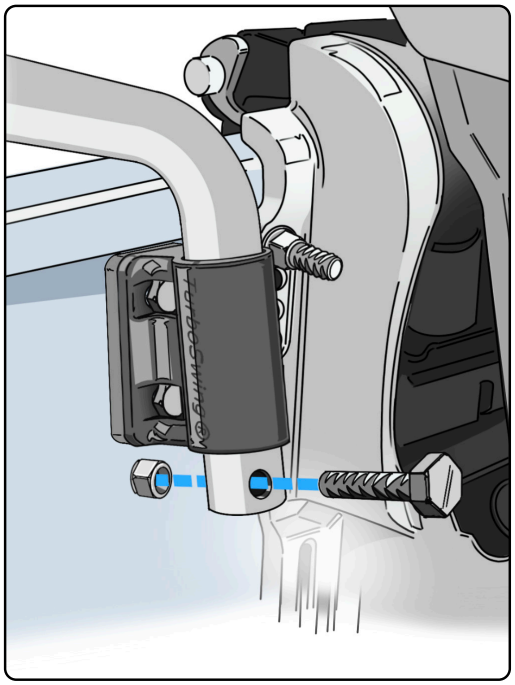

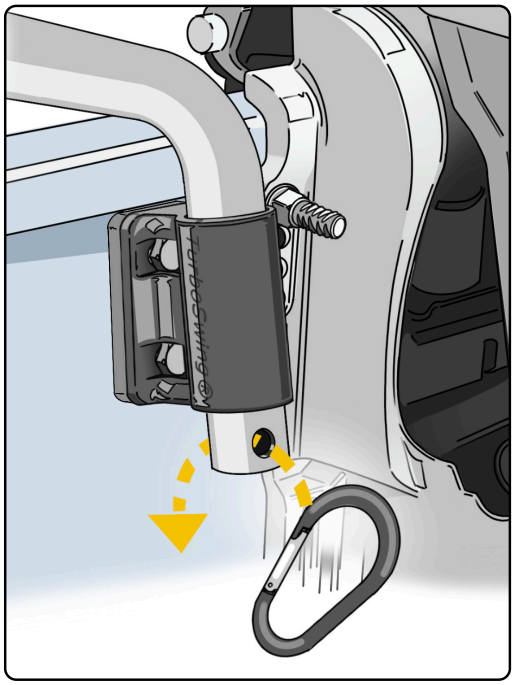

© 2024 TurboSwing All Rights Reserved 2640 Byington Solway Rd, Knoxville, TN 37931 855.228.8726 turboswing.com

TurboSwing®

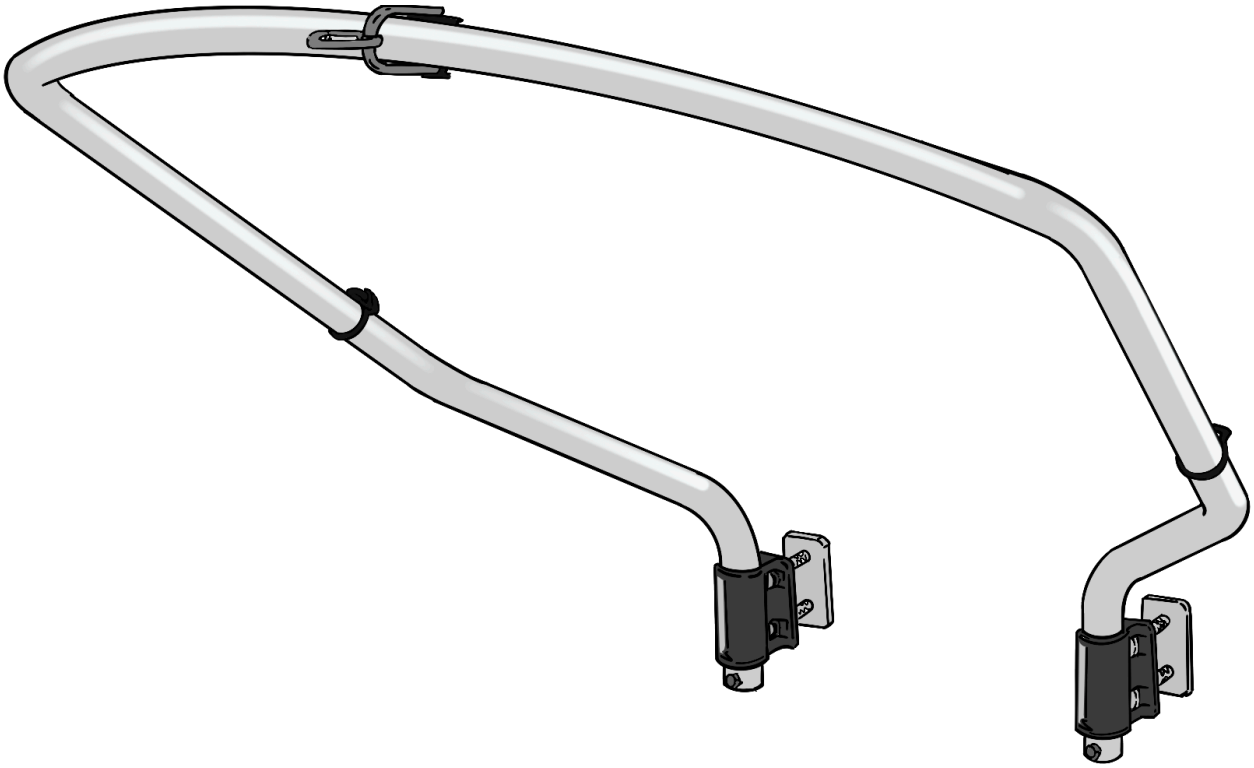

Congratulations

You have just successfully installed your new TurboSwing MAX!

Tag us on social media to be featured on our feed. Welcome to the team!

©2024 TurboSwing All Rights Reserved 2640 Byington Solway Rd, Knoxville, TN 37931 855.228.8726 turboswing.com